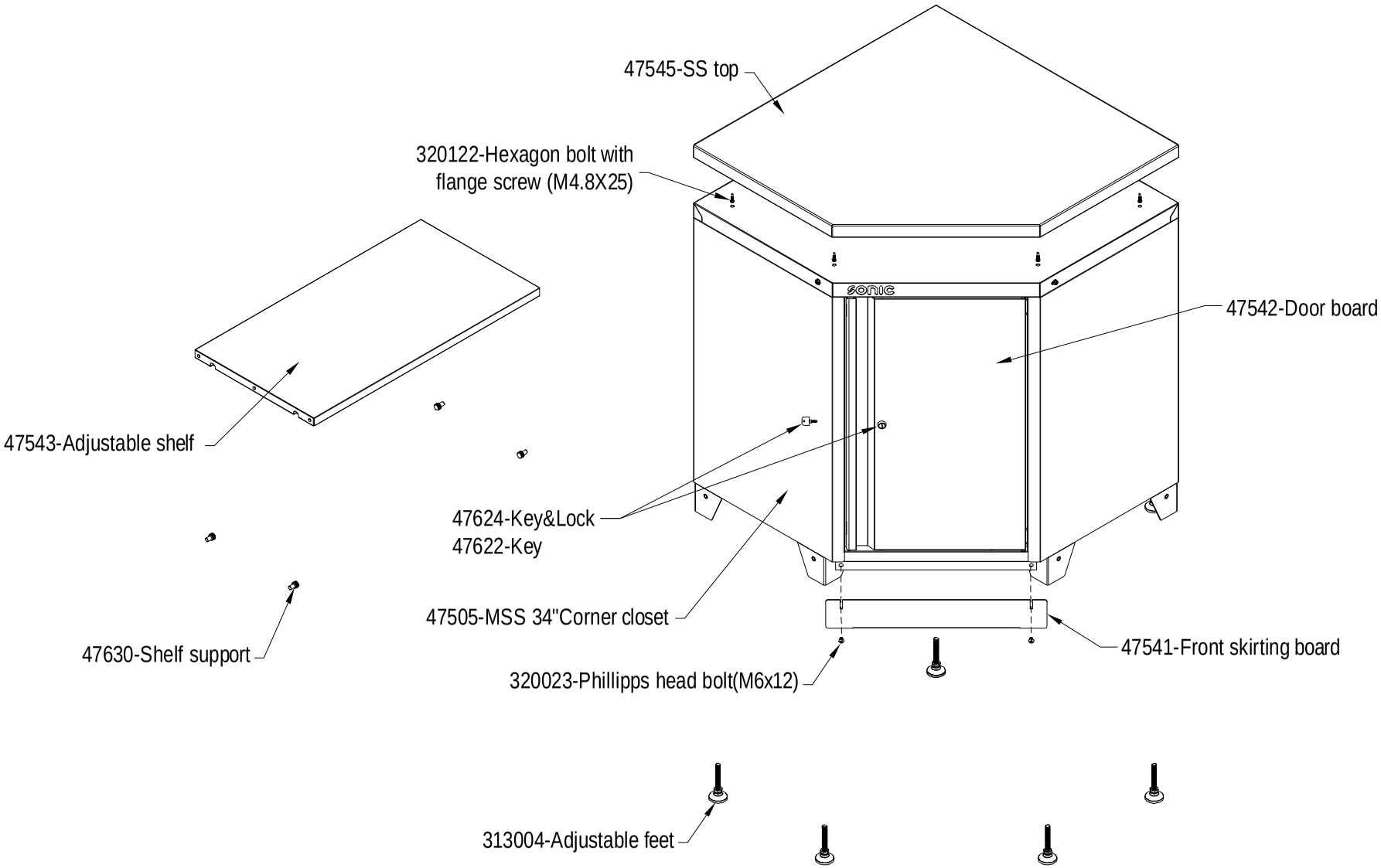4731714 - MSS 34" Corner Setup (SS top)