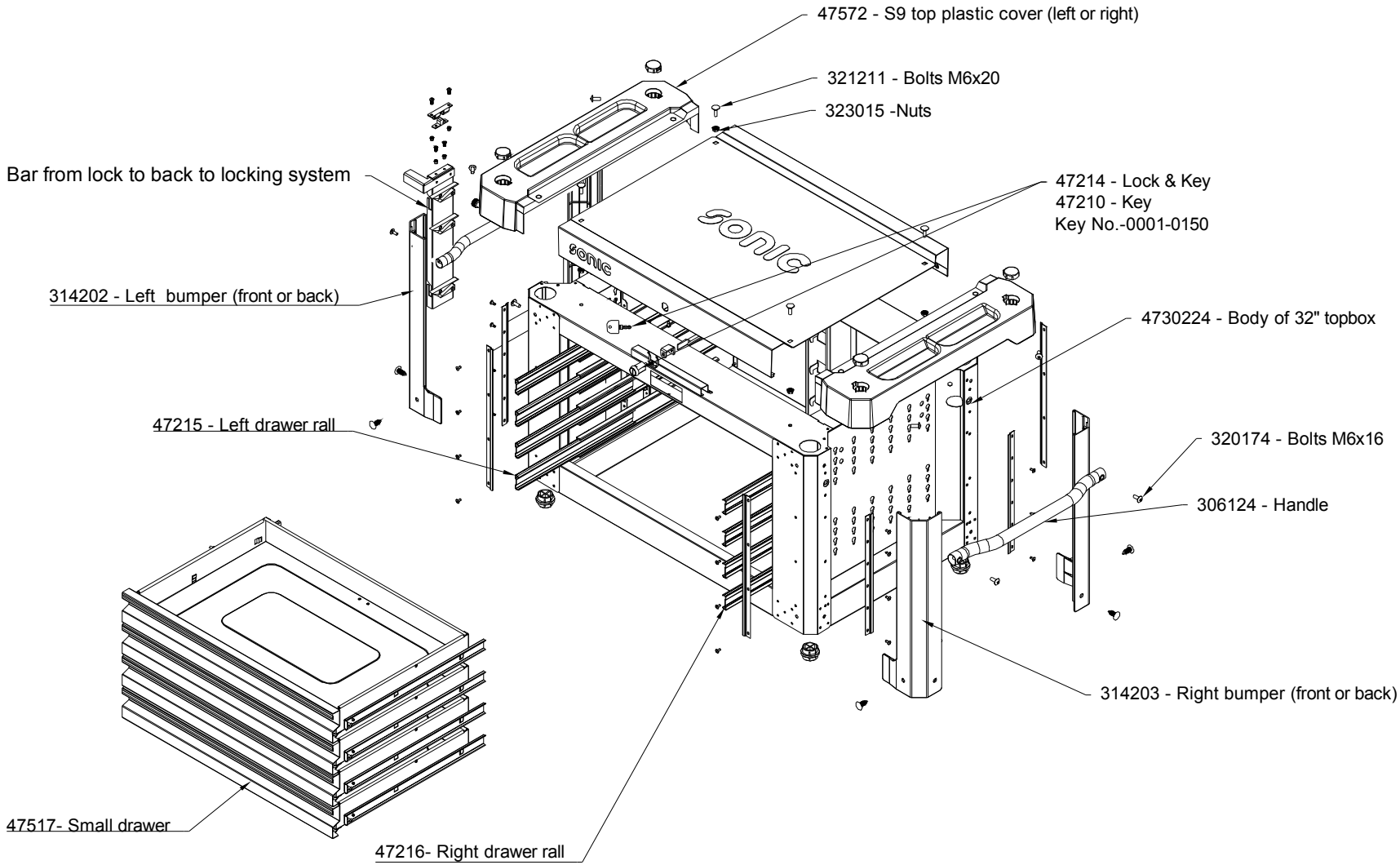4730224 - Empty Topbox S9 4 Drawers Black